NOTES:
1. MATERIAL: SEE COMPONENT SPECIFICATIONS.
2. FINISH: NONE.
3. CLEAN: UNLESS OTHERWISE SPECIFIED, PER AIR-1176A SEC. 5.
4. MARKING: UNLESS OTHERWISE SPECIFIED, PER IN-HOUSE DOC. ESR-005.

REMOVE ALL BURRS & SHARP EDGES

REVISION HISTORY

REV	DATE	E. C. O. / APPR.	NOTES
A	02-20-01	PLM	ADDED CHAIN & CAP ASSY.
B	11-11-11	HBS / PLM	ADDED SPLIT-RING TO ASSY. DETAIL

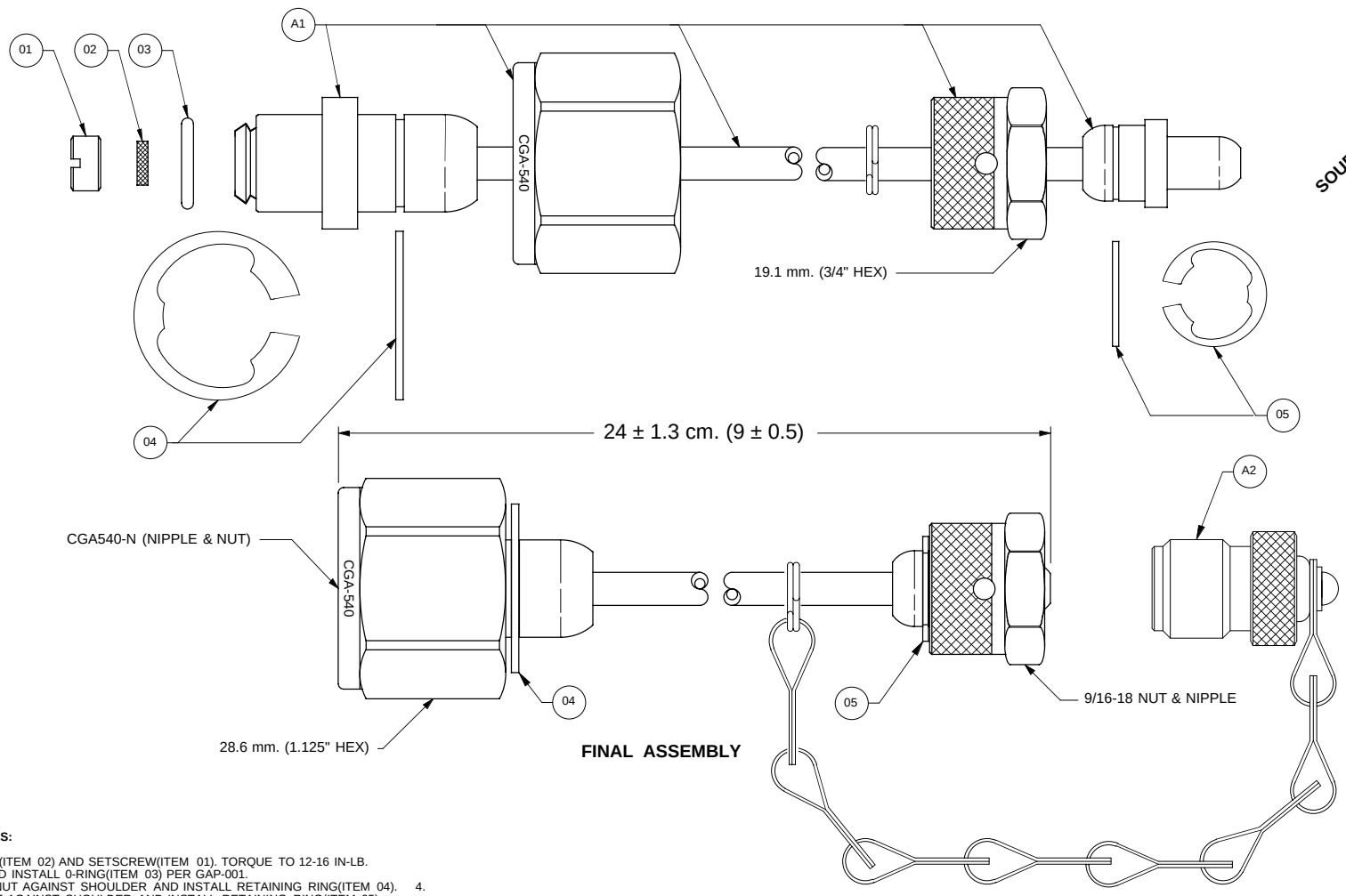

SOURCE CONTROL DOCUMENT FOR REFERENCE ONLY

ASSY. DETAIL FOR PRODUCT P/N TA916-N

ASSEMBLY NOTES:

1. INSERT FILTER(ITEM 02) AND SETSCREW(ITEM 01). TORQUE TO 12-16 IN-LB.
2. LUBRICATE AND INSTALL 0-RING(ITEM 03) PER GAP-001.
3. SLIDE LARGE NUT AGAINST SHOULDER AND INSTALL RETAINING RING(ITEM 04).
4. SLIDE SMALL NUT AGAINST SHOULDER AND INSTALL RETAINING RING(ITEM 05).

REF	QTY	DWG / PART NO.	REV	SUB-ASSY.	NOMENCLATURE
01	01	0RG10-0202-00	A	-	SETSCREW, HOLLOW
02	01	09025-0003-00	-	-	FILTER
03	01	09001-0904-00	-	-	0-RING
A1	01	-	-	0TA54-0111-00	ASSY, TUBE (CGA-540 NIP / SCOTT)
04	01	09005-0001-00	-	-	RING, RETAINING
05	01	09005-0002-00	-	-	RING, RETAINING
A2	01	-	-	CP02-0102-01	ASSY, CHAIN AND CAP

UNLESS OTHERWISE SPECIFIED DIMS ARE IN INCHES.
TOLERANCES ARE:

0.X	±0.015	ANGLES	FRACTIONS
0.XX	±0.010	± 0.5°	± 1/64
0.XXX	±0.005		

INTERPRET GD&T PER ASME 14.5

63

FMT REV H

THIRD ANGLE PROJECTION

DO NOT SCALE DRAWING

MOUNTAIN HIGH
E&S CO.
REDMOND, OR. USA

[KC]
00

NUMBER OF KEY CHARACTERISTICS IN THIS DRAWING / DOCUMENT PER MH DOC: ESR-001

ORIGINAL MO-DA-YR	PLM, 11-24-99	MATERIAL	1	DWG. TITLE	ASSY, CGA540-NIPPLE/SCOTT TYPE (SCD)		
ENGINEER MO-DA-YR	PLM, 11-24-99	FINISH	2	DWG. NUMBER	TA54-112-000	DWG. REVISION REV B	DWG SIZE A
DRAWN MO-DA-YR	PLM, 11-24-99	CLEAN	3	CAD FILE NUMBER	TA54-540 AL-Type: -112 (SCD)	DWG. SHEETS 1 OF 1	
CHECKED MO-DA-YR	-	MARKING	4	INV. PART NUMBER	00GSE-1026-00	CAT ITEM NUMBER 00GSE-1026-00	