REVISION HISTORY (version roll-offs are kept onfile)			
REV	DATE	E. C. O. / APPR.	NOTES
A	02-12-01	PLM.	ADDED CHAIN & CAP ASSY.
B	11-11-11	HBS / PLM	CHANGED TO SPLIT-RING ON CHAIN ASSY. PLACED NEW FORMAT

NOTES:

1. MATERIAL: BRASS CDA-360 AND COPPER; WEIGHT: 0.23 Kg. (6 Oz.)
2. FINISH: NONE.
3. CLEAN: UNLESS OTHERWISE SPECIFIED, PER AIR-1176A SEC. 5.
4. MARKING: UNLESS OTHERWISE SPECIFIED, PER IN-HOUSE DOC. ESR-005.

REMOVE ALL BURRS & SHARP EDGES

FILTER ASSEMBLY DETAIL

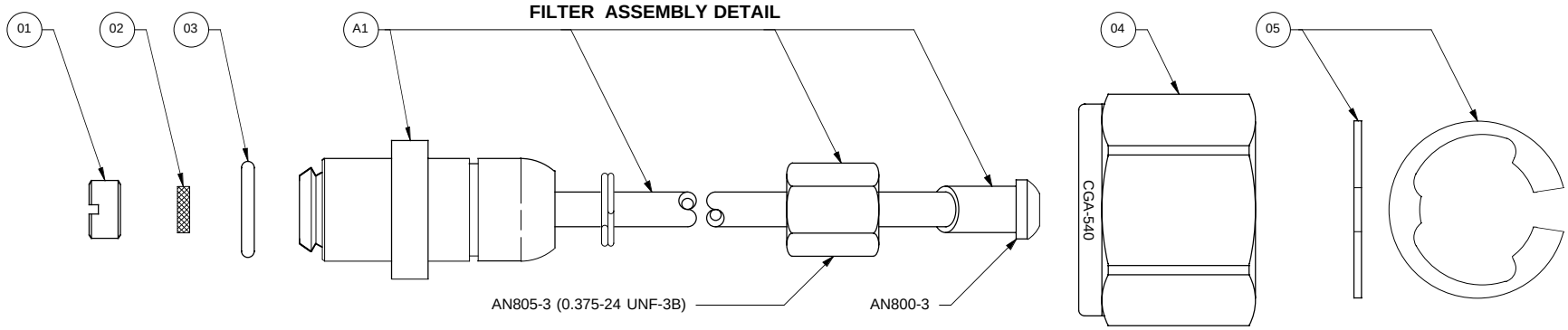

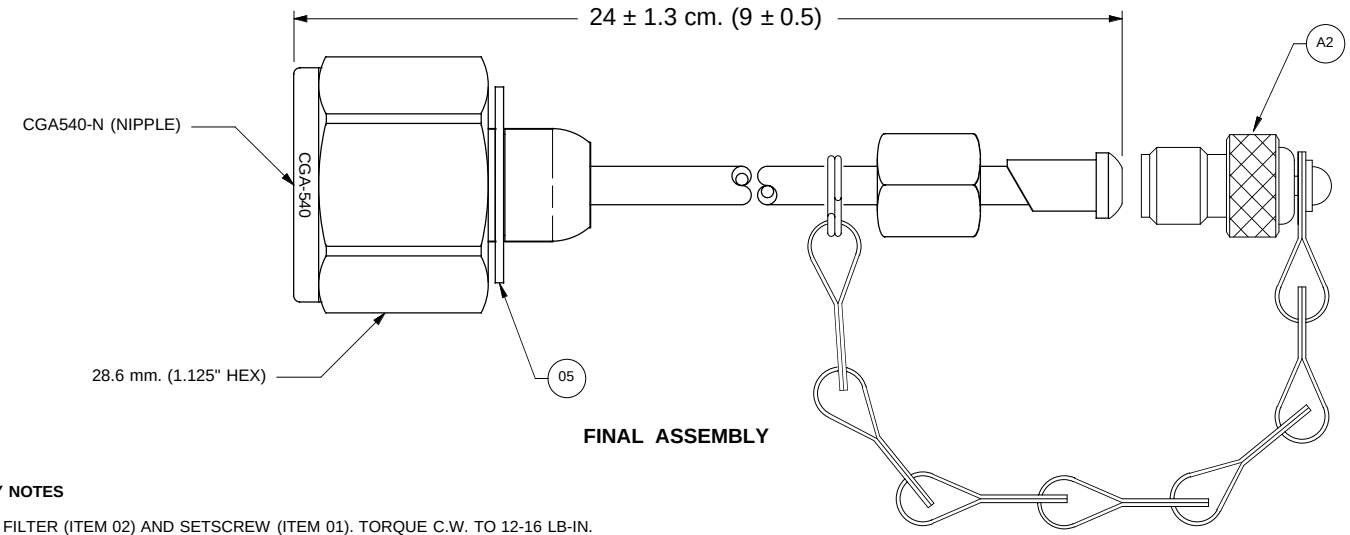

FINAL ASSEMBLY

SOURCE CONTROL DOCUMENT FOR REFERENCE ONLY

ASSY. DETAIL FOR PRODUCT P/N TA-380-N

ASSEMBLY NOTES

A: INSERT FILTER (ITEM 02) AND SETSCREW (ITEM 01). TORQUE C.W. TO 12-16 LB-IN.
B: LUBRICATE AND INSTALL O-RING (ITEM 03) PER GAP-001.
C: SLIDE NUT(ITEM 04) AGAINST SHOULDER AND INSTALL RETAINING RING (ITEM 05).

REF	QTY	DWG / PART NO.	REV	SUB-ASSY.	NOMENCLATURE
01	01	0RG10-0202-00	A	-	SETSCREW, HOLLOW
02	01	09025-0003-00	-	-	FILTER
03	01	09001-0904-00	-	-	O-RING (SAE-4; 2-904)
A1	01	-	A	0TA54-0101-00	ASSY, TUBE CGA540-N/AN800
04	01	09077-0002-00	-	-	NUT, CGA-540
05	01	09005-0001-00	-	-	RING, RETAINING
A2	01	-	-	0CP01-0101-00	ASSY, CHAIN AND PROTECTOR CAP

UNLESS OTHERWISE SPECIFIED DIMS ARE IN INCHES.
TOLERANCES ARE:

0.X	±0.015	ANGLES	FRACTIONS
0.XX	±0.010	± 0.5°	± 1/64
0.XXX	±0.005		

63

INTERPRET GD&T PER ASME 14.5 FMT REV H

THIRD ANGLE PROJECTION

DO NOT SCALE DRAWING

MOUNTAIN HIGH E&S CO. REDMOND, OR. USA

[KC] 00 NUMBER OF KEY CHARACTERISTICS IN THIS DRAWING / DOCUMENT PER MH DOC: ESR-001

ORIGINAL MO-DA-YR	PLM, 08-13-99	MATERIAL 1	DWG. TITLE	ASSY, CGA540-N/AN800 (SCD)			
ENGINEER MO-DA-YR	PLM, 08-13-99	FINISH 2	DWG. NUMBER	TA54-102-000	DWG. REVISION	REV B	DWG SIZE A
DRAWN MO-DA-YR	PLM, 08-13-99	CLEAN 3	CAD FILE NUMBER	TA54-540 AN-TYPE: -102 (SCD)	DWG. SHEETS	1 OF 1	
CHECKED MO-DA-YR	-	MARKING 4	INV. PART NUMBER	00GSE-1000-00	CAT ITEM NUMBER	00GSE-1000-00	